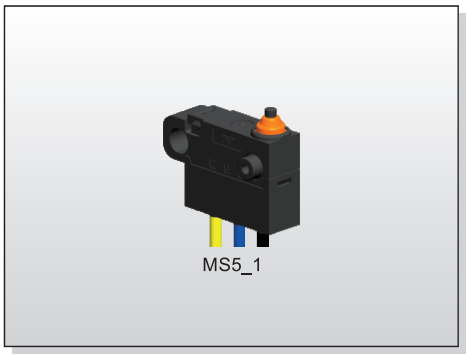
MS5_1

FEATURES
※Sealed IPX7
※14.7x5.4x12mm

APPLICATION
※Automobile industry
※Consumer electronics

SPECIFICATION

Contact Rating	0.1A at 48VDC 0.1A at 125VAC, 250VAC	MS5-01
	3A at 12VDC 3A at 125VAC, 250VAC	MS5-3
Mechanical Durability	500,000 cycles MIN.	
Electrical Durability	100,000 cycles MIN.	
Contact Resistance	150mΩ MAX.	
Insulation Resistance	100MΩ MIN. (at 500VDC)	
Dielectric Strength	Between terminals of the same polarity 600VAC (50Hz or 60Hz) shall be applied across terminals for 1 minute	
	Between each terminal and ground: 1,500VAC (50Hz or 60Hz) shall be applied across terminals for 1 minute	
	Between each terminal and non-current-carrying metal parts 1,500VAC (50Hz or 60Hz) shall be applied across terminals for 1 minute	
Operating Temp.	-40°C~+85°C	

HOW TO ORDER

M S 5 - □ □ □ □ □

CODE	Rating c
01	0.1A at 48VDC 0.1A at 125VAC, 250VAC
3	3A at 12VDC 3A at 125VAC, 250VAC

CODE	Actuator	
P	Pin Plunger	

CODE	Force
S	130gf(1.3N)MAX.

CODE	Terminal Type
W	Lead Wire Wire:UL 1007 AWG24 COM: Black NO: Blue NC: Yellow
S	Solder Terminal 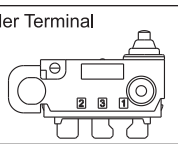

CODE	Contact Form
1	SPDT 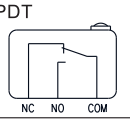

CIRCUIT

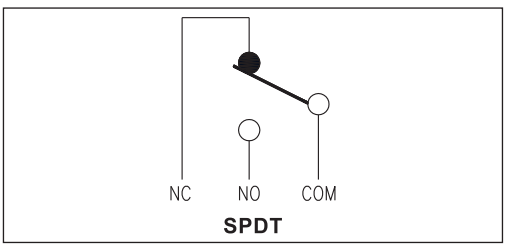

MS5-□PS1W

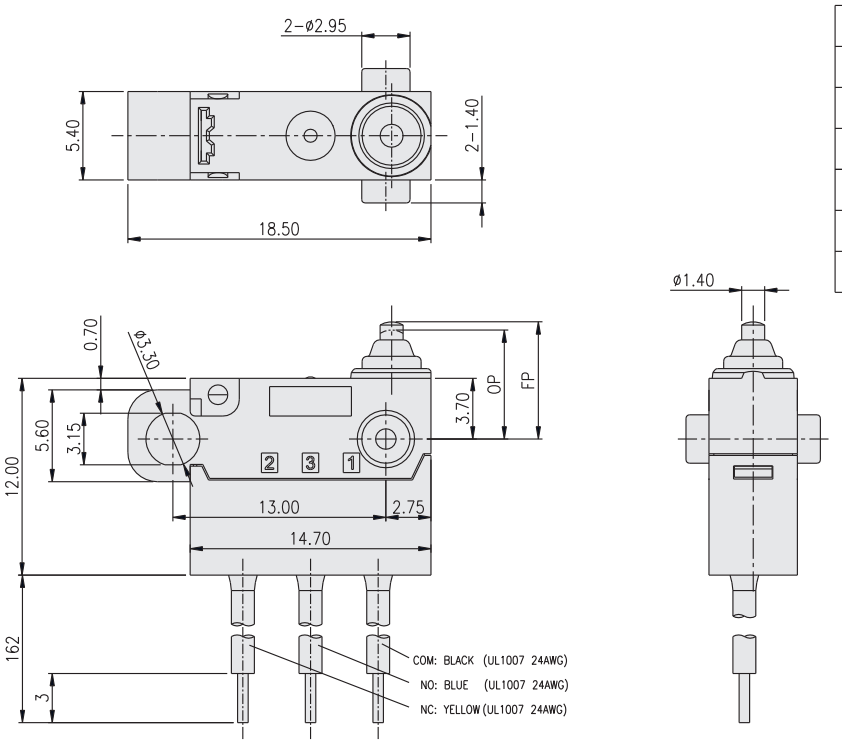

OPERATING CHARACTERISTICS

ITEM	SPEC.
OPERATING FORCE(OF)	130gf (1.3N) MAX.
RELEASE FORCE(RF)	13gf (0.13N) MIN.
FREE POSITION(FP)	7.35mm MAX.
OVERTRAVEL(OT)	(0.80mm)
MOVEMENT DIFFERENTIAL(MD)	0.20mm MAX.
OPERATING POSITION(OP)	6.40~6.95mm