Detector Horizontal Type

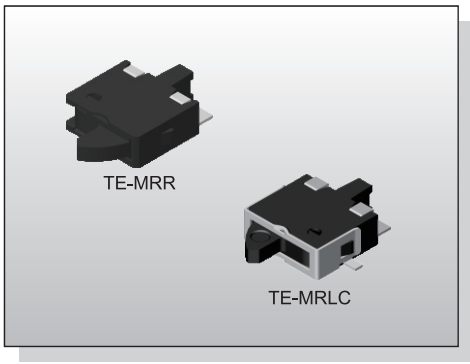

FEATURES

※Left or right operating direction

APPLICATION

※Close/open detection
※White goods
※Automotive

SPECIFICATION

Contact Rating	50mA, 20V DC
Contact Resistance	1Ω max.
Insulation Resistance	100MΩ min. 100V DC
Dielectric Strength	100V AC/1 minute
Operating Force	50gf max.
Travel	2.15mm
Operating Life	100,000 cycles
Operating Temp.	-40°C ~ +85°C
Storage Temp.	-40°C ~ +85°C

HOW TO ORDER

T E - M R □ □ - □ - □

- S.M.T.
- Actuator Direction: Side Stem
- Opreating Direction: R=Right Side, L=Left Side
- □=Without Ground Pin, C=With Ground Pin
- V=RoHS & Lead Free Solderable, Q=Halogen Free
- Package: T/R=Tape & Reel

CIRCUIT

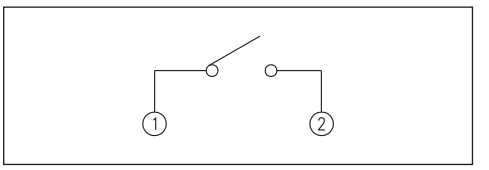

PACKAGE

<Tape & Reel>
TE-MR□: 3000 pcs
TE-MR□C: 2000 pcs

TE-MRR

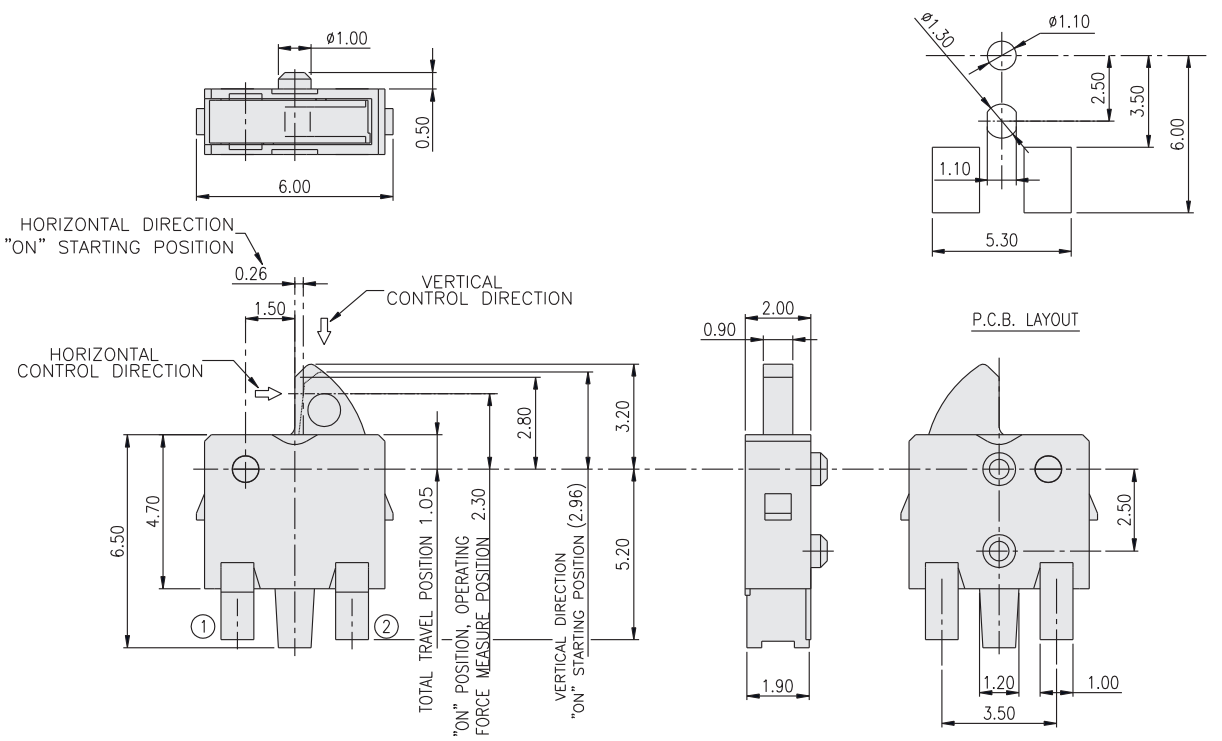

TE-MRLC

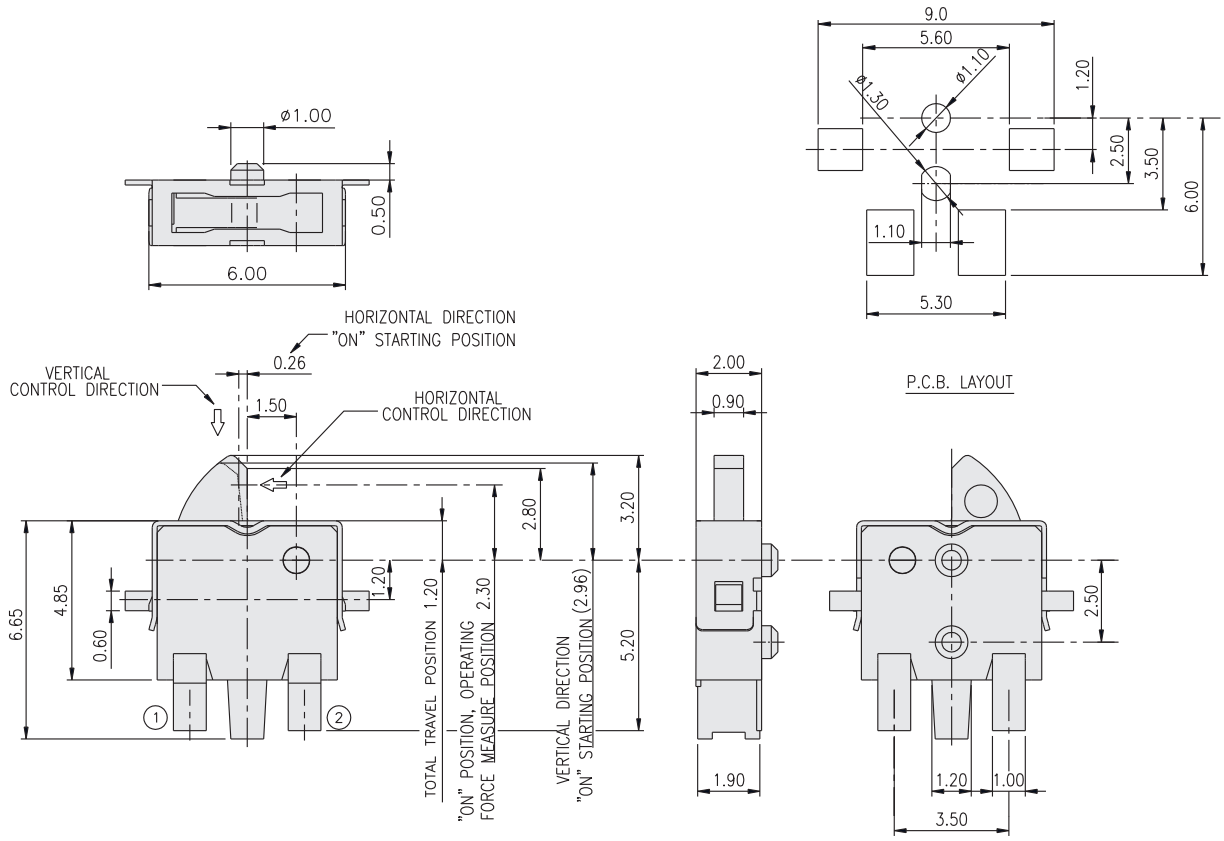
ø1.00
0.50
6.00
9.0
5.60
ø1.30
ø1.10
1.20
2.50
3.50
6.00
1.10
5.30
HORIZONTAL DIRECTION
"ON" STARTING POSITION
0.26
VERTICAL
CONTROL DIRECTION
1.50
HORIZONTAL
CONTROL DIRECTION
2.00
0.90
P.C.B. LAYOUT
6.65
4.85
0.60
1.20
2.80
3.20
5.20
TOTAL TRAVEL POSITION 1.20
"ON" POSITION, OPERATING
FORCE MEASURE POSITION 2.30
VERTICAL DIRECTION
"ON" STARTING POSITION (2.96)
1
2
1.90
2.50
1.20
1.00
3.50