2.2mm Half Pitch Type

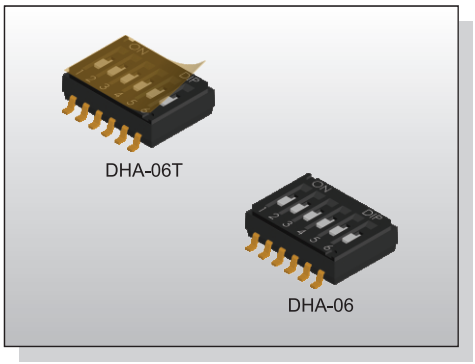

FEATURES

※Low profile 2.2mm height
※Gold contact for high reliability
※Top tape type for washing process

APPLICATION

※Industrial control
※Automatic machines control
※NB, electronic devices

SPECIFICATION

Contact Rating	25mA, 24V DC
Contact Resistance	100mΩ max.
Insulation Resistance	100MΩ min. 500V DC
Dielectric Strength	300V AC/1 minute
Operating Force	500gf max.
Travel	0.8mm
Operating Life	1, 000 cycles
Operating Temp.	-40°C ~ +85°C
Storage Temp.	-40°C ~ +85°C

HOW TO ORDER

D H A - □ □ □ □ Q □

- Positions: 02, 04, 06, 08, 10, 12
- □="OFF" Position, N="ON" Position
- □=Regular, T=Top Tape Sealed
- Halogen Free
- Package: R=Tape & Reel, □=Tube

CIRCUIT

PACKAGE

<Tape & Reel>
1800 pcs
<Tube>
DHA-02: 125 pcs
DHA-04: 75 pcs
DHA-06: 54 pcs
DHA-08: 40 pcs
DHA-10: 33 pcs
DHA-12: 28 pcs

DHA

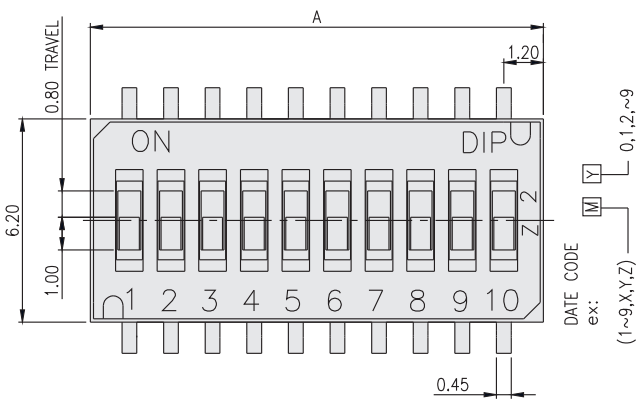

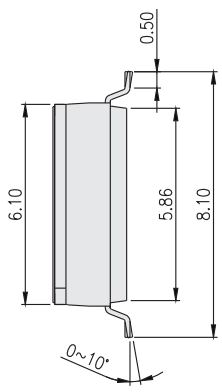

PART NO.	NO.OF POS	DIM A
DHA-02	2	3.67
DHA-04	4	6.21
DHA-06	6	8.75
DHA-08	8	11.29
DHA-10	10	13.83
DHA-12	12	16.37

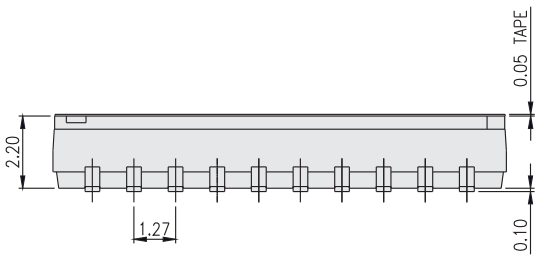

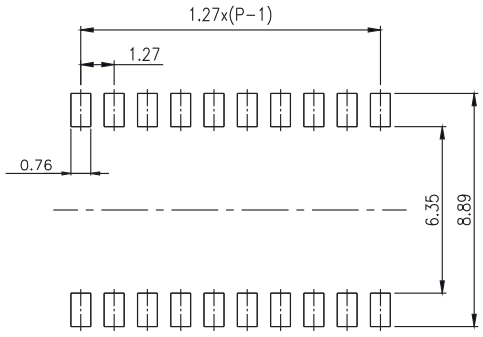

P.C.B. LAYOUT